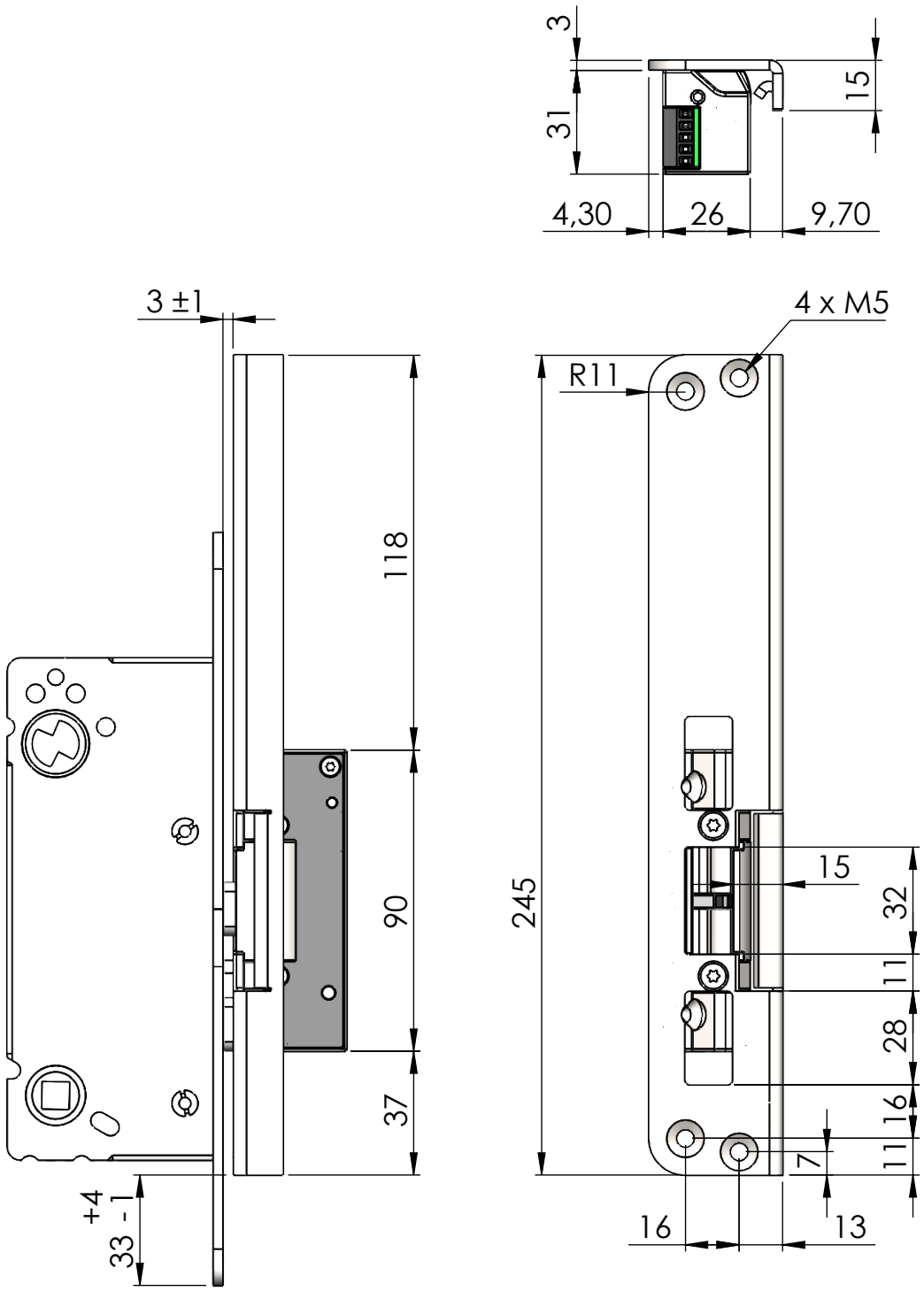

SCALE: 1:2

SAFE TRON
ELECTRONIC LOCKS

Property of Safetron AB, Sweden.
This document contains proprietary information. Reproduction or use in any unauthorized way is prohibited without the express written consent of Safetron AB,Sweden.

This document is subject to change without notice

TITLE:

SA39V - Connect - ES17

Sales Drawing

Drawing No: 1074956.SA39V.1

Rev 1

2024-05-29

A4